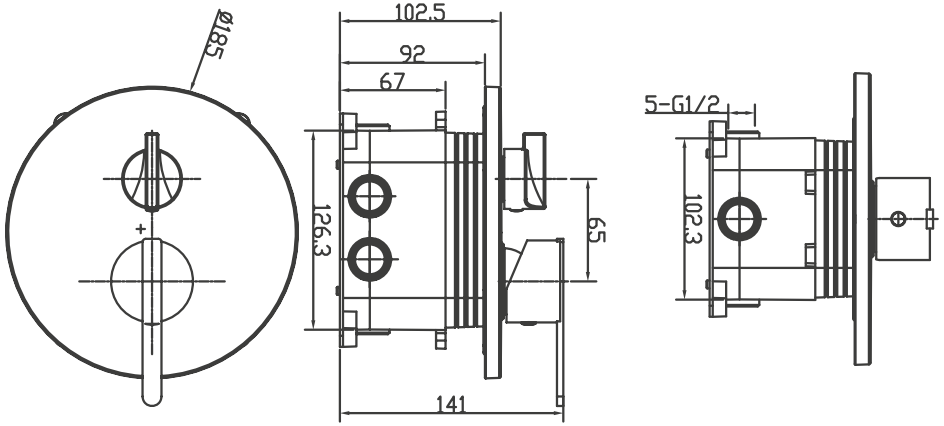
Ø185
102.5
92
67
126.3
65
141
5-G1/2
102.3